Piranha III™ VME Version

The Future of Dynamic Data Acquisition and Analysis

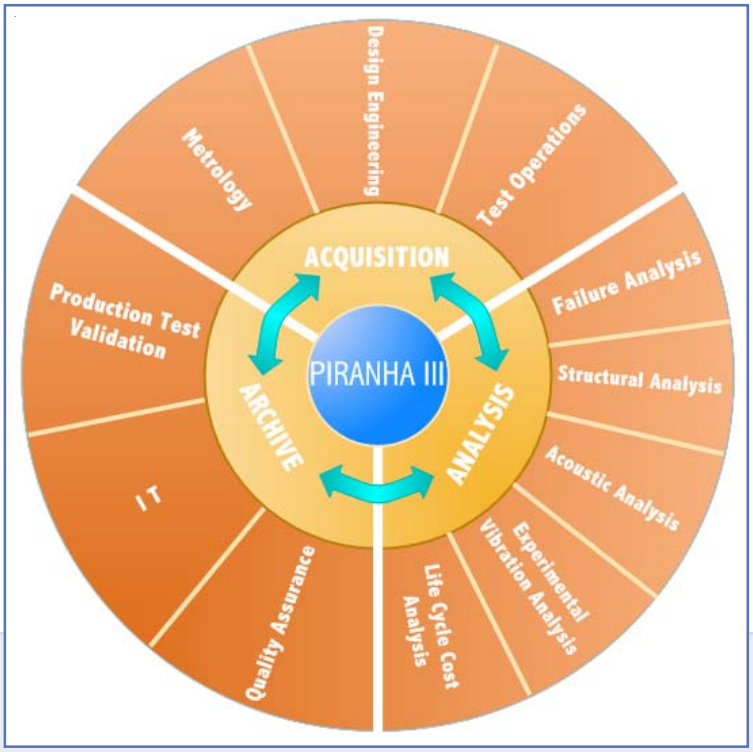

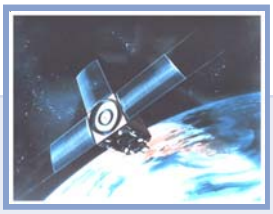

- Based on Open Standards
- Based on Popular COTS (Commercial Off The Shelf) Technology
- Superior Performance
- Turnkey (Sensor to Archive)
- Full Suite of Powerful Analysis Tools
- Modular, Expandable Monitoring and Storage
- Channels scalable from 32 to thousands with no bottlenecks

Minimize Time Between Acquisition and Processed Results

Decrease Cost of Ownership

Maximize Return on Investment

DSPCon Incorporated

Versatile Real-time Acquisition and Processing

The Piranha III™ line of products forms a state-of-the art, real-time system designed for data acquisition, real-time monitoring, recording, analysis, and archiving of dynamic signals. Piranha III architecture is highly modular and scalable for both hardware and software. Solutions range from entry-level recording systems to comprehensive enterprise-level systems that process and manage data from "cradle to vault".

Piranha III systems feature specialized signal processing functions for real-time, on-line, and post-test analysis of phenomena for a wide range of applications and signal domains. Within Piranha III, these signal processing functions support:

- Shock and Vibration
- Rotating Machinery and Engine Testing
- Acoustics
- Wind Tunnels
- General Acoustic Frequency Applications

Piranha III components provide reliable, flexible tools for performing:

- Calibration
- Test Setup
- Test Execution and Real-time Monitoring
- On-line and Post-test Analysis
- Data Archiving

DSPCon, Incorporated is a full-service solution provider of real-time data acquisition and analysis systems for use by the military, aerospace, engine test facility, and structural engineering markets.

Our innovative, cost-effective, open-standards approach to design assures that the systems we provide are always up to date, and can be migrated, grown and scaled upward with maximum confidence and minimum effort and risk.

To achieve the high standards demanded by today's market, DSPCon operates as a manufacturer, retailer and service provider. In addition to our various system- and software-level solutions, we also design and build special-purpose boards for use within systems or sold as stand-alone products. We furnish system design expertise, real-time software algorithms, data analysis systems, and complete standard and custom systems that use COTS technology.

DSPCon, Incorporated has successfully designed and installed hundreds of systems for commercial and defense companies. We are gratified and proud of the level of confidence that our clients place in us.

Piranha III...the standard for cost-effective, multiple-channel solutions

Unmatched Real-time Performance

Hardware

Piranha III™ VME is specifically designed for large-channel-count data acquisition systems. It is housed in a VME chassis and is controlled with a rackmount or desktop PC.

- Employs SAN technology which provides optional remote storage, monitoring and control via Fibre Channel or Ethernet.
- Piranha III VME uses a standard PC running Windows 2000 or XP and has an unlimited number of channels of 256 Ksample per second, 24-bit A/D optionally rounded to 16 bits.
- Supports a wide variety of high-availability, scalable, storage solutions including removable media, JBODs and RAIDs. This storage can be expanded or converted at any time.
- Provides reliable data recording, real-time critical monitoring functions, and very high performance display update rates.
- Provides higher availability of data to operators and analysts.
- Can be combined with other Piranha III VME systems and/or PC-based Piranha III systems to form much larger channel count solutions.

Piranha III VME systems supply a very high level of performance when scaled to any size. A high-performance Fibre Channel network forms the backbone that is the key to hardware scalability.

- Fibre Channel provides deterministic, high-bandwidth data transfer from processor-to-processor and from processor-to-storage
- The VME-based components provide reliable data recording, real-time critical monitoring functions, and very-high-performance displays. The PC provides additional computer power and very-high-speed displays

Piranha III data acquisition hardware is supplied in a VME-based form factor for higher channel count systems.

- Multiple front-ends in a mix of form-factors can combine to create large synchronous-sampling systems
- Software provides simultaneous real-time data display of all channels via additional PC workstations dedicated to monitoring data

Piranha III post-test and storage hardware consists of:

- PC workstations for analysis
- JBOD and/or RAID storage
- Tape drives and/or libraries for archiving data to long-term storage

Specifications

Sample Rate: 1K to 256KS/S/Ch in .001 S/S Increments
Input Slew Rate: 15V/uSec
Input: Differential, ±10v @ gain of 1
Input Impedance: 100 kOhms
Frequency Response: ± 0.1dB, DC to 90kHz
Gain (Optional): 1, 10, 100
Time Skew: <50ns
Inter-channel Phase Match: <0.1 degree @ 10kHz, <1 degree @ 90kHz
CMMR: 100dB Typical
Anti-aliasing Filter: Analog: 2-pole Butterworth @ 320kHz
Digital: Sigma/Delta @ 0.4535 x Sample Rate
Cross Talk: –110dB @ 1kHz; 95dB @ 10kHz
Coupling: AC and DC
SNR: >94dB
SFDR: >98dB
SINAD: >92dB

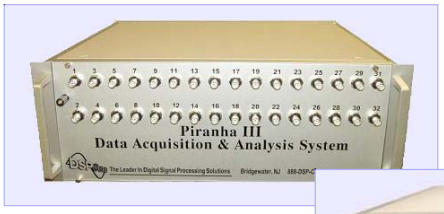

32-channel Configuration

64-channel Configuration

Portable VME System

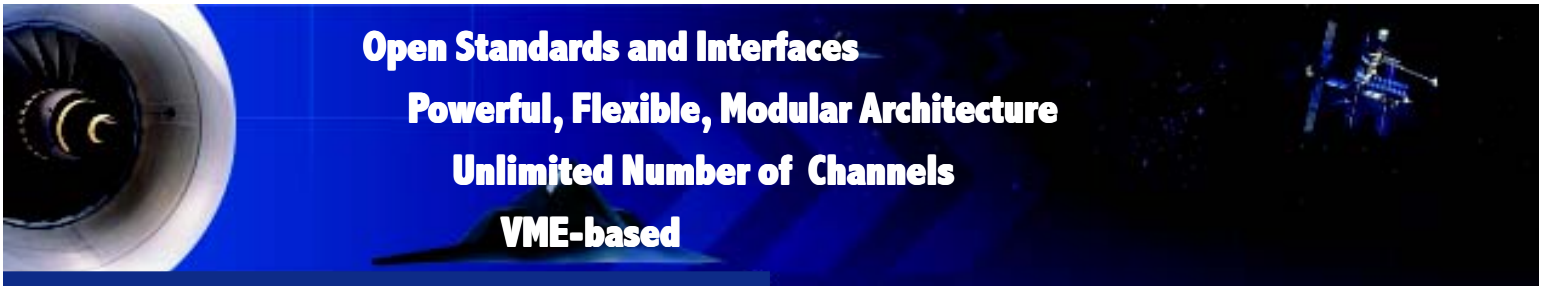

Features

- Runs DSPCon's Piranha-RM™ and/or Piranha-SV™ software
- Interfaces to Ethernet LAN and Fibre Channel SAN
- Optional IRIG-B or GPS Time Stamp capability
- Straightforward system enhancement and expansion via COTS plug-in components

Typical Piranha III System

Data Storage & Archive

For most PIRANHA III VME applications, an internal, Fibre Channel disk system is adequate. However, for applications in which larger capacity and/or redundant recording are required, we offer external RAID and JBOD systems. Additional storage can be easily added at any time, and can be expanded to many terabytes.

DSPCon's archive system provides cataloging and immediate data retrieval for analysis with the post- processors, and the ability to pre-configure archiving to tranparently and automatically back up acquired data to disk or tape libraries, then clear the working scratch data disks.

JBOD and RAID Options

Data Storage Options

All of DSPCon's Data Acquisition systems support a wide variety of data storage options including CD ROM, DVD ROM, AIT tape, and removable media.

Signal Conditioning

DSPCon selects signal-conditioning to suit the requirements of each application. Systems from such premier manufacturers as Precision Filters, Endevco, Sonoran, and PCB support the following types of transducers:

Piezoelectric
IEPE (Internal-Electronic Piezoelectric)
Bridge/Strain Gauge
Thermocouple
Capacitive
Tachometer

DSPCon regularly provides integration and interfacing to signal conditioning systems to satisfy new and unusual applications.

Enterprise Solutions

PIRANHA III VME can be integrated with other PC- and VME-PIRANHA systems to provide essentially-unlimited channel counts.

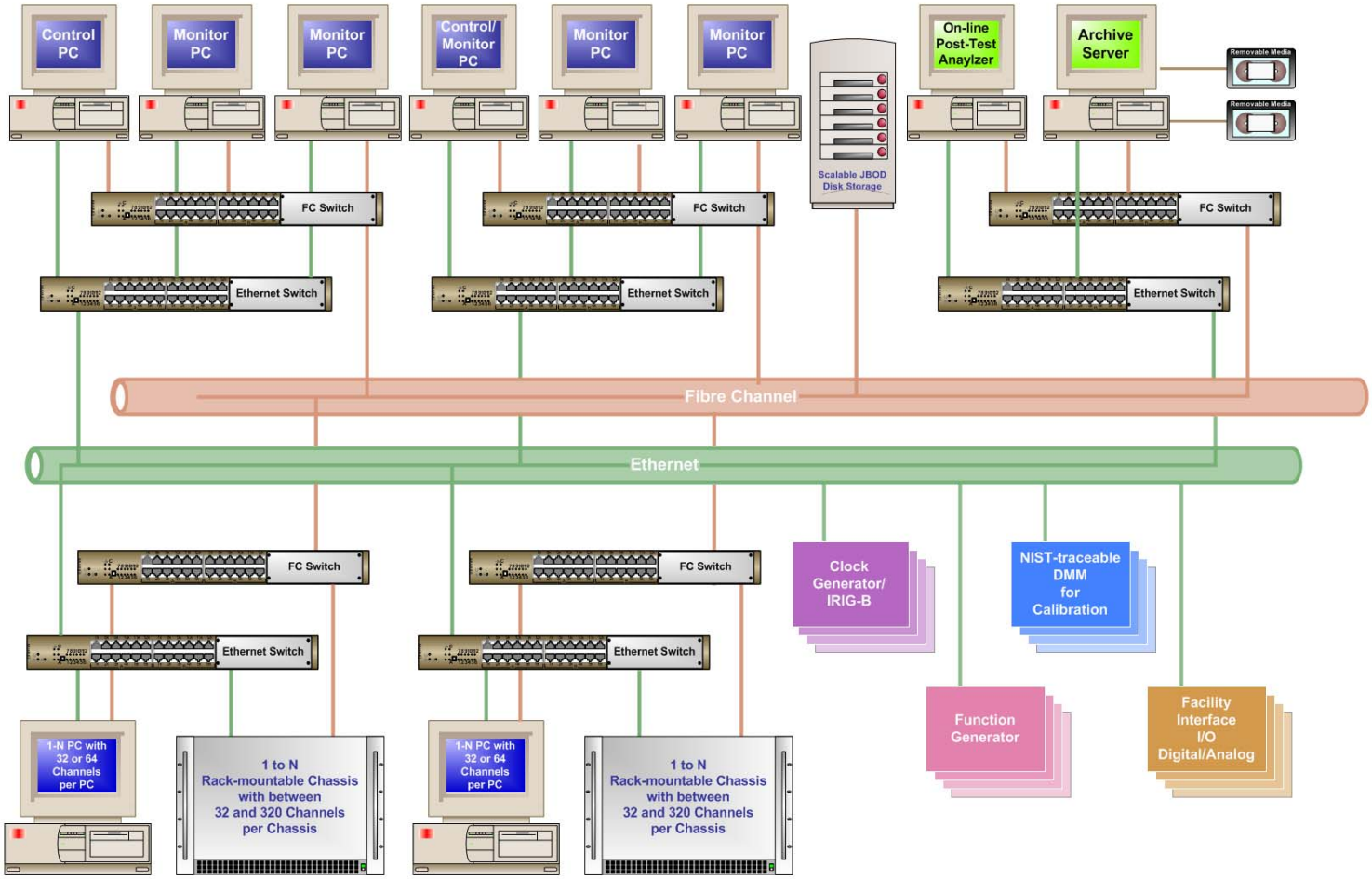

Piranha III Enterprise Solution

Architecture

The POWERFUL SOFTWARE SUITE of components controls the data moving engine, controls data writing, and handles system calculations, and performs a variety of run-time, application-based calculations.

The KSI MODEL 9245 DSP baseboard controls the acquisition and data transfer.

The KSI MODEL 9842 32-channel,24-bit A/D converter, optionally rounded to 16 bits, digitizes the data, and the KSI MODEL 9705 performs the clocking functions.

The FIBRE CHANNEL PCI interface transfers data to the system disks for recording.

The PCI G4 POWER PC card provides the calculation functions.

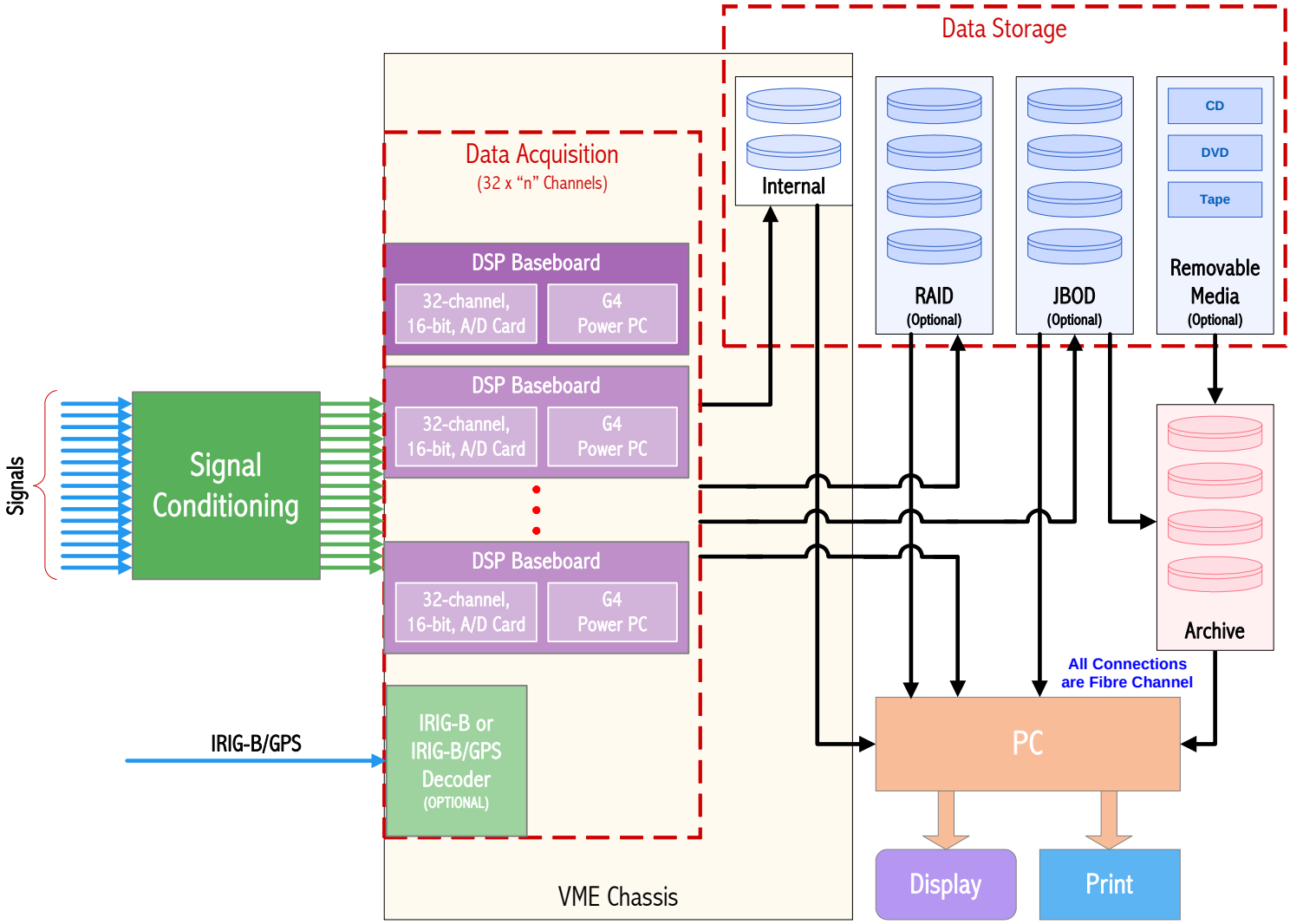

Piranha VME Architecture Diagram

Software Component Bundles

This table shows the DSPCon software that runs on the VME version.

For more detailed information on these software component "bundles", see the Piranha III Software brochure.

Model	Option	Description
5940		Shock and Vibration Analysis Bundle (Optional Components)
	001	Shock Response Spectra (SRS) Analyzer
	003	Sine Analyzer
5941		Acoustic Analysis Bundle (Optional Components)
	001	Nth Octave Analyzer
	002	Acoustic Sound Intensity Analyzer
5942		Rotating Machinery Analysis Bundle (Optional Components)
	001	Rotating Machinery Analyzer
5960		Piranha Run-time Bundle (Core Components)
	001	System Executive (includes the Resource Server)
	002	System Control Interface
	003	Analysis Server
	004	Data Extractor
5961		General Analysis Bundle (Optional Components)
	001	Narrowband Analyzer
	002	Cross-channel Analyzer
	003	Time Domain Analyzer
	004	Data Resampler
	005	Overlay and Concatenation
5962		Utilities Bundle (Core Components)
	001	Data Viewer
	003	CATS/DATX Index File Generator
	004	Matrix Plotter
	005	CATS/DATX Limit File Generator
	008	CATS/DATX Header Editor
5963		CATS/DATX Upload/Output Converter Bundle (Optional Components)
	001	CATS/DATX to CSV
	002	CATS/DATX to B&K Pulse (B&K)
	003	CATS/DATX to UFF58 (M&P)
	004	CATS/DATX to TDF (LMS)
5970		Adjunct Components (Optional Components)
	001	System Configuration Selector
	002	Test Definition Editor
	003	Calibration Package (includes): Calibration Calculator MS-SQL Calibration Database Device Database Editor
	004	Analysis System Interface
5971		Adjunct Components Bundle (Optional Components)
	001	MultiScope Display
	002	Limits and Alarms Display
	003	Amplifier Control Interface
5980		Piranha III Archive Server Bundle (Optional Components)
	001	Archive Data Manager

Piranha III

The Future of Dynamic Data Acquisition and Analysis

"Our customers told us they wanted an open architecture solution that would be well-supported, upgradable for 10 to15 years, and designed to reduce their test costs. DSPCon responded with our Piranha III solution, which is unique in its totally open-standard (COTS-intensive) architecture that can be configured to address a wide variety of end applications. Every software and hardware architecture is published, so that a customer can either mix our solution with others, or develop custom add-ons in-house.

We made Piranha III scalable and modular in design, so it's a highly cost-effective way to acquire, analyze, and store dynamic data. This design approach offers very high performance to engineers, while providing a great, low-cost, quick Return On Investment solution to management."

– Al Brower, President, DSPCon, Inc.

Acquiring, Processing and Managing the World's Data.

DSPCon, Incorporated 380 Foothill Road Bridgewater, New Jersey 08807
Phone (908) 722-5656 Fax (908) 722-3259 Email: info@dspcon.com
www.dspcon.com